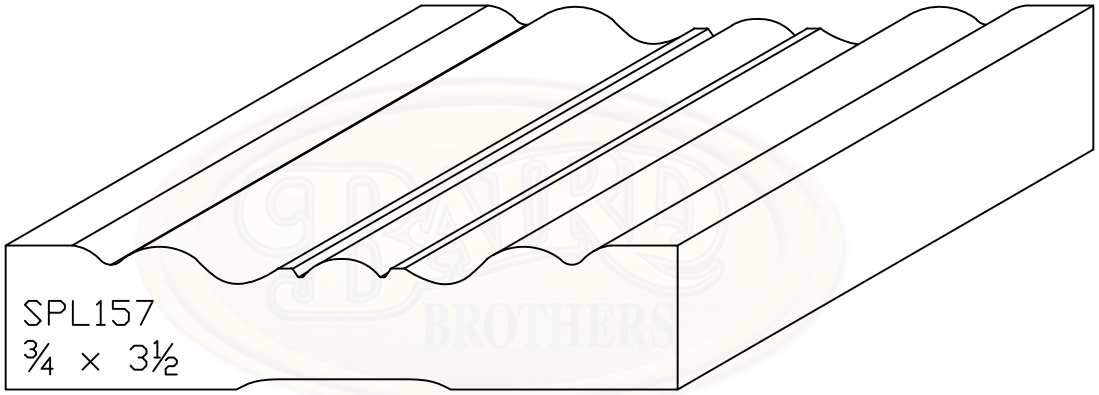

FINE HARDWOODS
Our Family's Heritage. Your Family's Home.

Baird Brothers Fine Hardwoods
Baird Brothers Sawmill Inc. www.BairdBrothers.com
7060 Crory Rd. Canfield, OH 44406
(330) 533-3122 (800) 732-1697

DATE: 12-2-13	DRAWN BY: AMB		SHEET: 1 of 1
SCALE: 1:1	REV	REV DATE:	REV BY:
DRAWING #: SPL157		THIS DRAWING IS PROPERTY OF BAIRD BROTHERS SAWMILL INC.	