Baird Bros.

Carolina Heavy Series
Post to Post 2nd Floor
Landing Newel

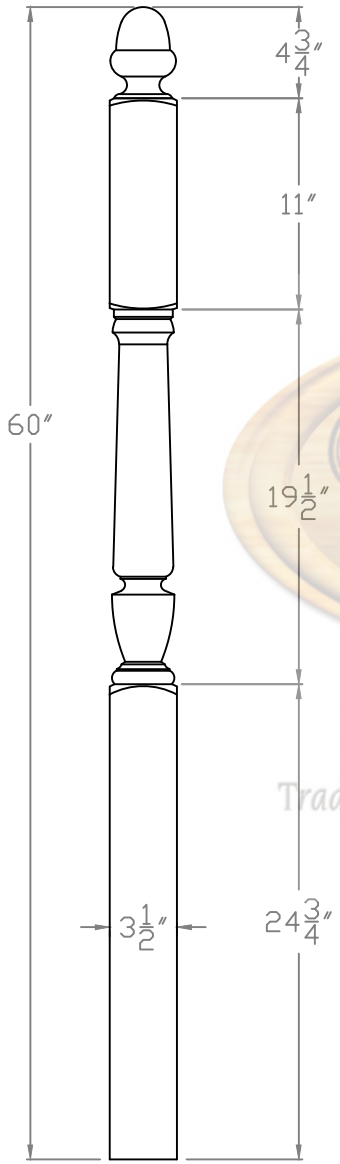

BAIRD BROTHERS
FINE HARDWOODS
Traditional Craftsmanship. Timeless Style.

Baird Brothers Fine Hardwoods
Baird Brothers Sawmill Inc. www.BairdBrothers.com
7060 Crory Rd. Canfield, OH 44406
(330) 533-3122 (800) 732-1697

DATE: 10-22-13	DRAWN BY: AMB		SHEET: 1 of 1
SCALE: 1:10	REV	REV DATE:	REV BY:
DRAWING #: BB-3045		THIS DRAWING IS PROPERTY OF BAIRD BROTHERS SAWMILL INC.	