Baird Bros.

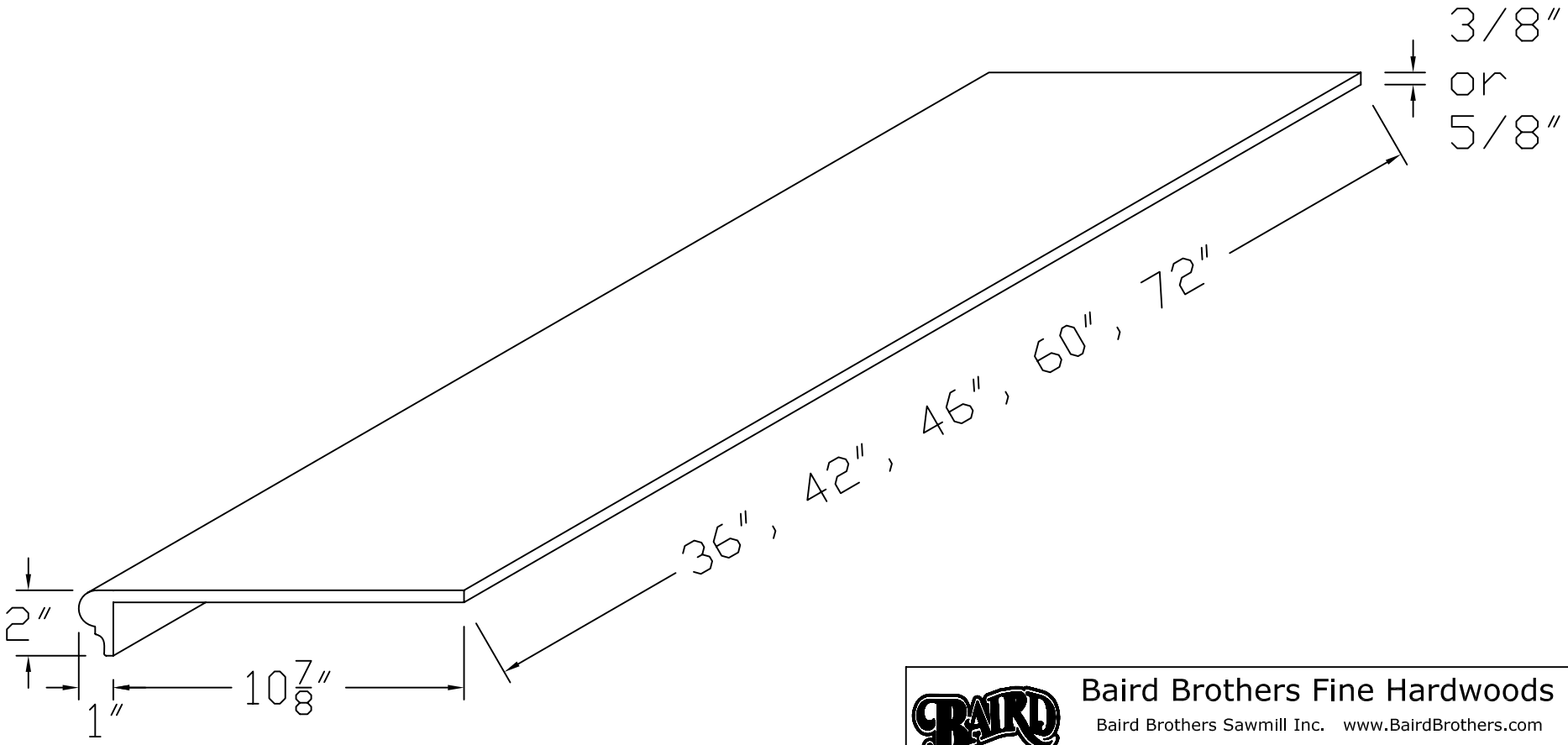

Baird Brothers Fine Hardwoods

Baird Brothers Sawmill Inc. www.BairdBrothers.com

7060 Crory Rd. Canfield, OH 44406

(330) 533-3122 (800) 732-1697

DATE: 1-7-13	DRAWN BY: AMB		SHEET: 4 of 6
SCALE: 1:5	REV	REV DATE:	REV BY:
DRAWING #: NS 8023-25		THIS DRAWING IS PROPERTY OF BAIRD BROTHERS SAWMILL INC.	